O-Rings & Kits
Compounds
Custom Parts
Specialty Parts
Services
Wear Guides
Rod Seals
Piston Seals

Wipers

QUALITY | VALUE | SERVICE

Wipers

ALL SEALS
THE SEALING SPECIALISTS

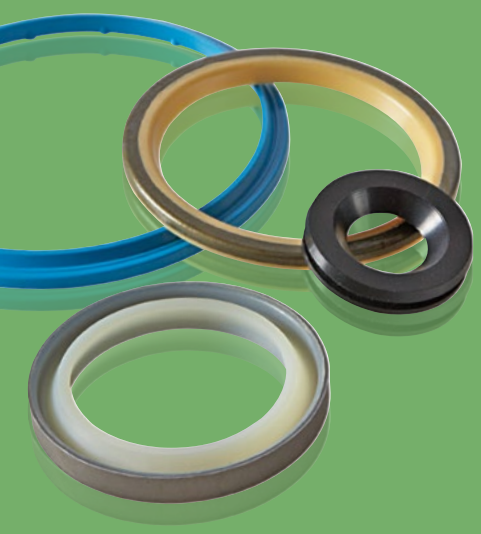

Seal good in, wipe bad out.

In the industrial fluid and hydraulics fields, contaminants pose a constant threat to infiltrate sensitive systems. There's tremendous pressure on seals, and manufacturers must rely on flawless wipers to continuously seal out debris. That's why All Seals wipers are your best line of defense.

We stock every type of wiper for every application. With our world-wide network, we can source even the most difficult-to-find wipers. If you require custom forms and fits, we'll design and create a wiper that fits your plan to the T – from prototyping to testing to certification.

We also save you time and trouble too with our value added services like JIT/Kanban programs, pre-production and kitting, custom product markings and your choice of packaging options. All Seals is your one-stop resource for everything, including peace of mind.

For more information, quick quotations, expert consultation and responsive customer service call us at 800.553.5054.

WIPERS

STANDARD AN WIPER

TEMPERATURE RANGE
-50º – +275º F

VELOCITY
3.2 feet/sec max

MATERIALS
Urethane
Hytrel™

FEATURES
Short axial shoulder height
Slotted heel available

APPLICATIONS
Light duty
Low friction
Retrofits MS-33675 glands for corresponding dash numbers of MS-28776

D-STYLE WIPER

TEMPERATURE RANGE
-50º – +400º F

VELOCITY
3.2 feet/sec max

MATERIALS
Urethane
Hytrel™
Nitrile
Viton®

FEATURES
Slotted heel available
Dual OD contact points
Radius wiper lip
DIfferent style available
Low wear, long life

APPLICATIONS
Medium duty
Large diameter
High cycle
Contaminated environments

PREMIUM D-STYLE WIPER

TEMPERATURE RANGE
-50º – +275º F

VELOCITY
3.2 feet/sec max

MATERIALS
Urethane
Hytrel™
Nitrile
Viton®

FEATURES
RL wiper lip
Slotted heel
O-ring energizer
Radius wiper lip
Reduces rod seal leakage
Long wear, long life

APPLICATIONS
Moderate/Heavy duty
Retrofits standard D Wiper grooves
Withstands severe side deflections & shock loads
Long stroke
Contaminated environments

H WIPER

TEMPERATURE RANGE
-50º – +400º F

VELOCITY
2.4 feet/sec max

MATERIALS
Urethane
Nitrile
Hytrel™
Viton®

FEATURES
Secondary rod and u-cup
Radius wiper lip

APPLICATIONS
Light/Medium duty
Low pressures
Mill cylinders

Viton is a registered trademark of DuPont Performance Elastomers. We are a genuine Viton® Licensee.

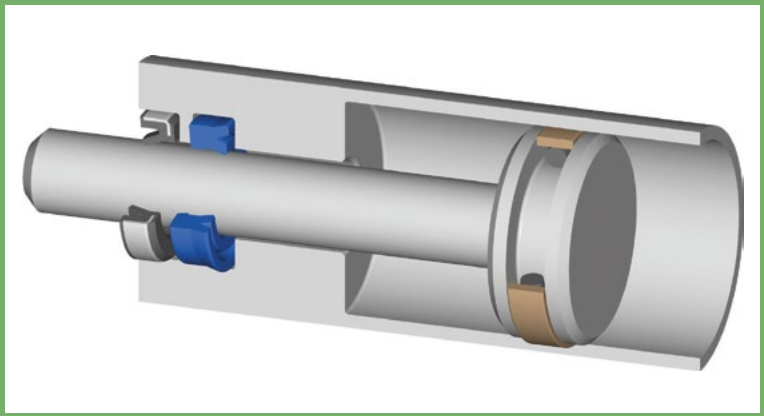

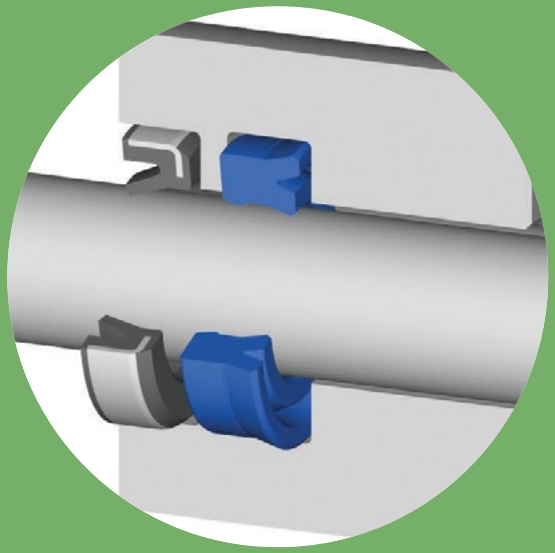

QUALITY | VALUE | SERVICE

Wipers

	TEMPERATURE RANGE	MATERIALS	FEATURES	APPLICATIONS
SH WIPER 	-50º – +250º F **VELOCITY** 4.9 feet/sec max	Urethane	Secondary rod u-cup Radius lip wiper Self cleaning wiper lip design Reduction in apparent rod seal leakage Mechanical & chemical bonding of metal retaining ring & urethane element	Medium/Heavy duty Severely contaminated environments Mobile hydraulics
SC WIPER 	-50º – +250º F **VELOCITY** 4.9 feet/sec max	Urethane	Radius lip wiper Self cleaning wiper lip design Reduction in apparent rod seal leakage Mechanical & chemical bonding of metal retaining ring & urethane element	Heavy duty Severely contaminated environments Mobile hydraulics
STANDARD METAL CLAD WIPER 	-50º – +250º F **VELOCITY** 4.9 feet/sec max	Urethane	Mechanical & chemical bonding of metal retaining ring & urethane element Highly abrasion & wear resistant urethane base	Heavy duty Severely contaminated environments Mobile hydraulics Dry/wet mud & ice Tough scraping environments
METAL CLAD SPRING LOADED WIPER 	-50º – +250º F **VELOCITY** 4.9 feet/sec max	Urethane	Mechanical & chemical bonding of metal retaining ring & urethane element Unique lip design for stainless steel ring	Heavy duty Severe service conditions Temperature extremes

NOTE: Capabilities shown in this brochure are directly related to design tolerances. Please consult with All Seals for your specific application. All Seals supplies many special wipers at temperatures up to 500ºF and in sizes ranging from tiny up to 4-8".

ALL SEALS
THE SEALING SPECIALISTS

CALIFORNIA
20762 Linear Lane
Lake Forest, CA 92630
800.553.5054 TOLL FREE
714.556.4931 PHONE
714.557.3257 FAX

TEXAS
4407 Halik Road, Building A
Pearland, TX 77581
800.553.5054 TOLL FREE
281.404.4384 PHONE
281.715.5379 FAX

CONTACT
sales@allsealsinc.com
www.allsealsinc.com

© 2015, All Seals, Inc.

LIMITED WARRANTY All Seals, Inc. ("Seller") warrants that its products ("Goods") will perform in accordance with their specifications; that the goods will be free from manufacturing defects for a period of twelve (12) months from the date of delivery of the goods to Buyer; and that the goods will be as specified by Buyer in the purchase order. Seller should have the right to elect to either refund the purchase price for any defective goods or replace any defective goods, provided that the goods were used in the manner for which they were manufactured. Seller does not warrant that the goods are fit for any particular purpose. Seller should have no obligation to refund the purchase price or replace goods that are rendered defective by a Buyer or a third party after they leave Seller's place of shipment.

LIMITED LIABILITY Seller's liability for its goods is limited to their terms set forth in Seller's express warranty set for above, in no event shall Seller's liability exceed the total purchase order price. Seller is not assuming any liability for any indirect, collateral, special, incidental or consequential losses or damages suffered by Buyer, or by any end-user or other third party, including but not limited to, lost profits, loss of business reputation and/or lost business opportunity, for any possible cause of action or claim arising out of or related to the goods sold to Buyer, even if Seller has been advised of the possibility of such loss or damage.